Introduction

Figure 1 - Component parts of the EMF oil mist filters

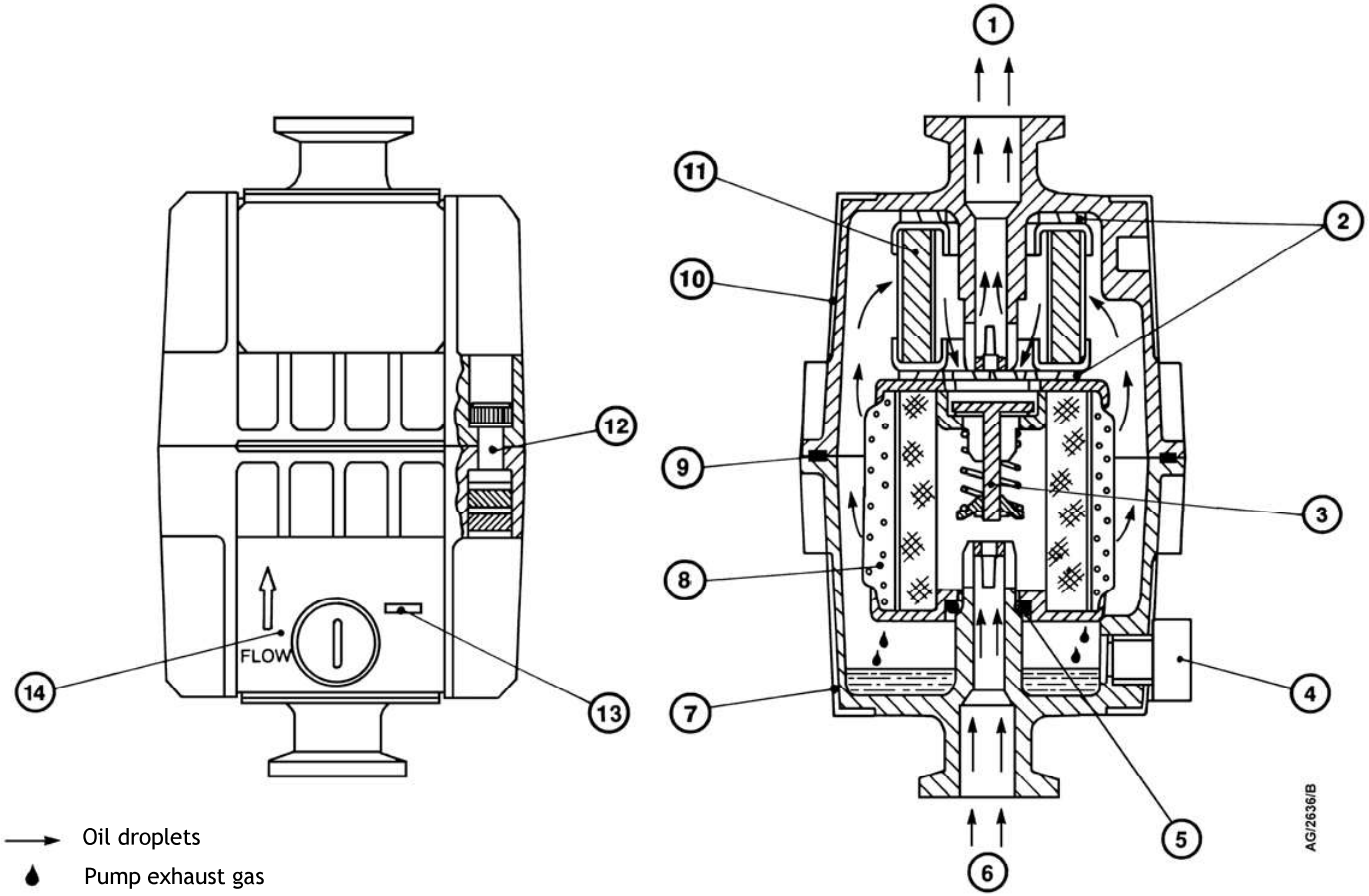

1. Outlet
2. Odour element seal
3. Pressure relief valve assembly
4. Drain plug
5. Mist filter element O-ring
6. Inlet
7. Lower body (white)
8. Mist filter element
9. D-seal
10. Upper body (grey)
11. Odour element
12. Body half securing screws
13. Maximum oil level
14. Sight panel

© Edwards Limited 2008. All rights reserved.
Edwards and the Edwards logo are trademarks of Edwards Limited.